INTERIOR LIGHT
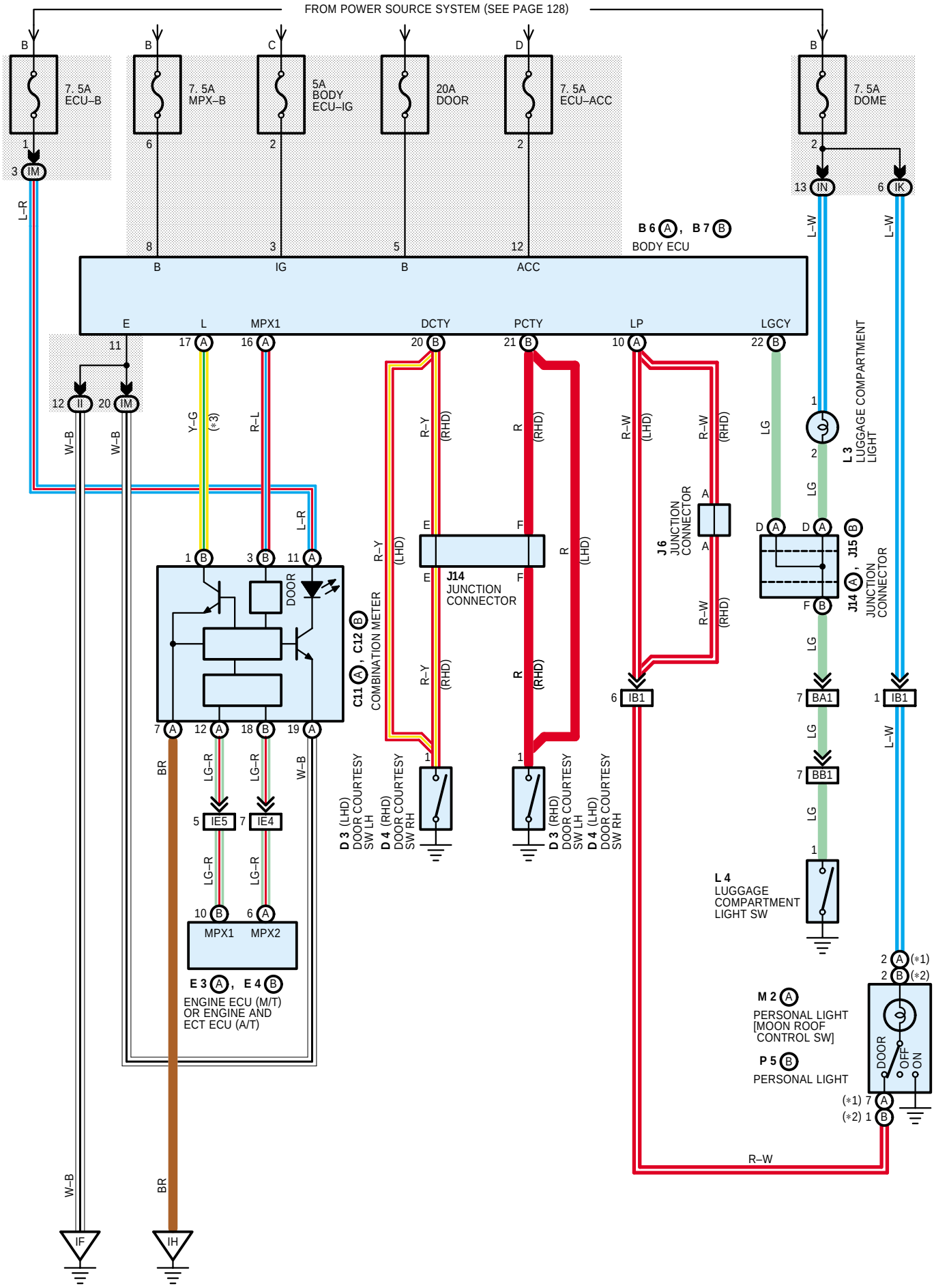
* 1 : W/ MOON ROOF
* 2 : W/O MOON ROOF
* 3 : W/ DAYTIME RUNNING LIGHT